LPLDD-5A-24V-PID

Operating Manual

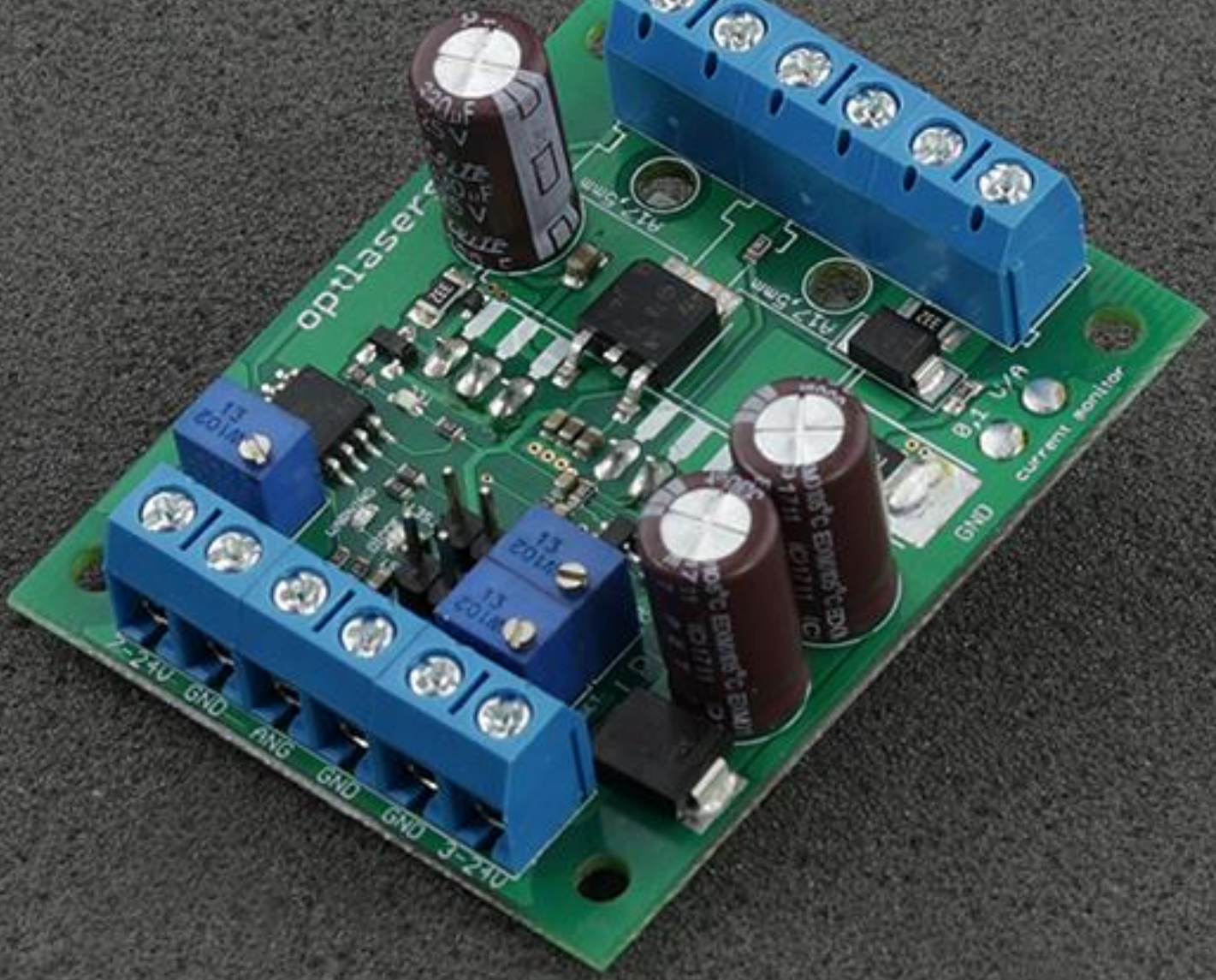

Contact and Shipping:
Tomorrow's System Sp. Z o.o.

Okulickiego 7/9 hala G39
05-500 Piaseczno
Poland
tel.: +48 515 180 752

Company Information:
Tomorrow's System Sp. Z o.o.

Pułaskiego 125/35
15-337 Białystok
Poland
NIP: PL5423238556

Table of content

Product Description

This is the 4th version of the professional driver for laser diodes with a built-in digital temperature controller using the PID algorithm. Its size allows for mounting it in small devices such as compact laser projectors. The driver is available in two versions. One includes the heatsink, the second one is without it and is dedicated to users who would like to use their own heatsink or optic plate.

The logic part of the driver is powered from TEC line, it allows to use 3,3V PSU to power the infrared diodes without the big amount of dissipated heat. TEC part should be connected, even if not used, to the voltage in 7V - 24V range.

Despite its small size, the driver is able to work with thermocouples (Peltier modules) such as 12706, 12708, 07113, and many others that draw up to 15A of current. Despite high current, thanks to using PWM the controller does not heat up. Used PID algorithm, hence quicker reacts to changes in temperature and provides higher accuracy of stabilization. The driver easily handles all laser diodes of up to 5W, and at the customer's request, it is possible to customize the driver up to 10A version. Separate laser diode supply voltage input and TEC input enable the selection of any components the driver can work with. Analog input allows for the modulation of the current flowing through the diode up to 100kHz. Two potentiometers are used to set the values of maximum diode current and bias current. The third potentiometer is responsible for setting the setpoint temperature in the range of 0 to 40 degrees Celsius. The possibility to power laser diodes of any wavelength and control the Peltier modules with a rated voltage from 7 to 24V and current up to 15A make this driver truly unique and extremely versatile. Diode line can be powered with voltages from 3V up to 24V so it makes it fully functional for any kind of laser diode.

Main features

Screw connectors - smaller size easy to connect the wires

Test jumper - the possibility of switching on the driver without external analog signal

Current monitor output - the convenient place to measure the current flowing through the diode

Signal diodes: diode enable, TEC, warning

Added labels on the board - more intuitive and easier to set

High TEC current - up to 15A

Technical Data

TEC maximum current	15A
TEC supply voltage	7 - 24V
Maximum diode current	5A
Current set by default	~0A
Laser diode supply voltage	3,3 - 24V
Modulation voltage (analog)	0 - 5V
Maximum modulation frequency	100kHz
Current monitor	100mV / 1A
Softstart	YES - 2000ms
Temperature sensor	10k NTC thermistor
Temperature stabilization accuracy	±0,1°C
TEC indicator	YES - blue LED
Laser diode indicator	YES - green LED
Over temperature protection	YES >50°C
Board dimensions	58mm x 45mm
Mounting holes distance	38mm x 48mm

Transistor type	N-MOSFET
Maximum heat dissipated	40W

Pinout

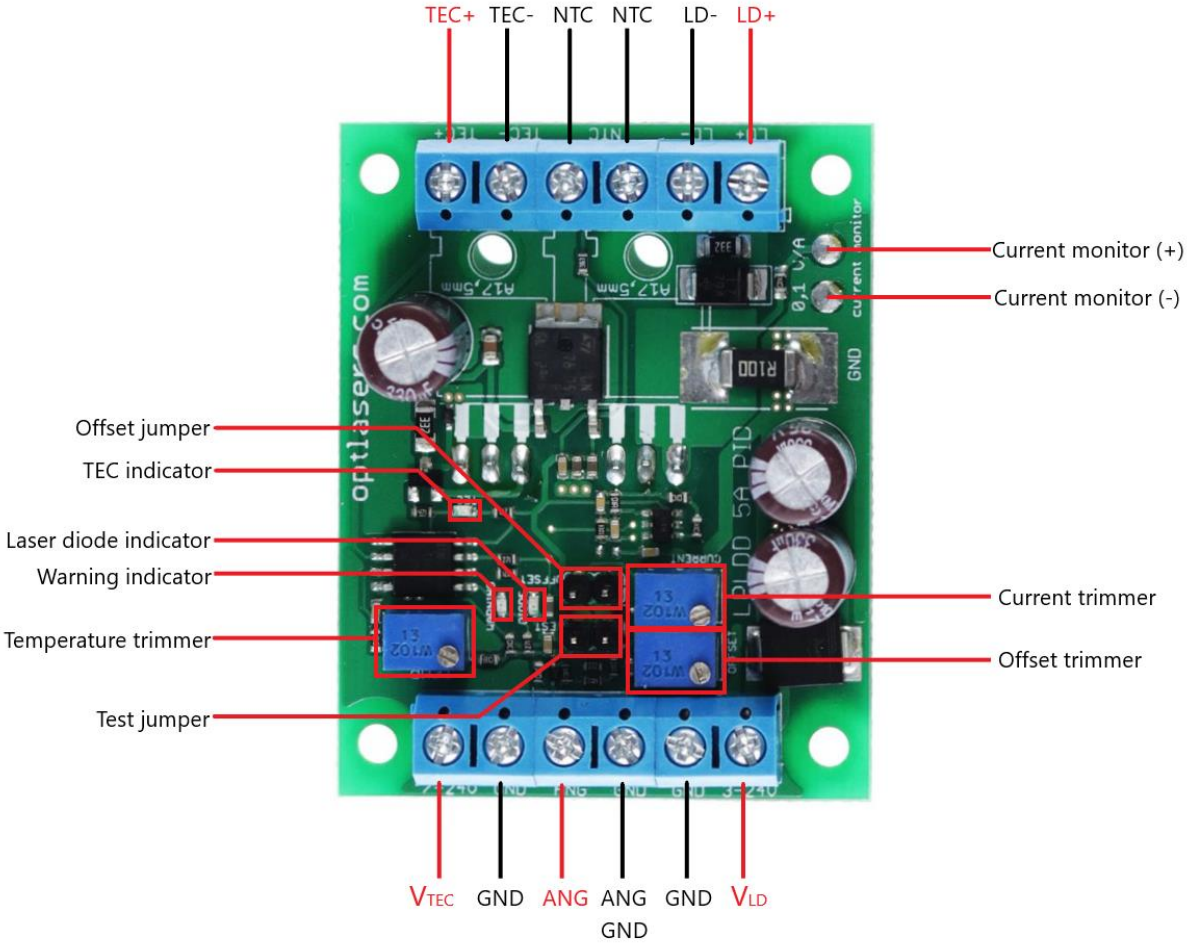

Inputs	
V_{TEC}	TEC module's power supply input. It has to be connected (even if TEC isn't used) to PSU which voltage value is 7V minimum and 24V max. Maximum current that this input can withstand is 15A.
GND	Two inputs that have to be connected to both TEC module's PSU and Laser diode's PSU.
ANG	Modulation input. It can be used as TTL input with its logic levels of 0V and 5V or as an analog input (also from 0 to 5V).
ANG GND	Modulation GND input.
V_{LD}	Laser diode's power supply input. It has to be connected to PSU, if laser diode is driven. Voltage range of this input is from 3V to 24V. Maximum current up to 5A.
Outputs	
TEC+	TEC module can be connected to this output.
TEC-	TEC module can be connected to this output.

NTC	Two outputs to connect 10k B=3950 thermistor.
LD-	Laser cathode (-) output.
LD+	Laser anode (+) output.
Trimmers	
Current trimmer	Trimmer that is used to set maximum current of laser diode. Maximum current is the current which is supplied to a laser diode whenever ANG=5V or test jumper is connected. The trimmer set maximum current value from 0A to 5A.
Offset trimmer	Trimmer that is used to set offset (bias) current of laser diode. The offset current is supplied to a laser diode only if Offset jumper is connected.
Temperature trimmer	Trimmer that is used to set temperature from 0°C to 40°C. When TEC module connected and supplied, the controller will be driving it to make difference between temperature measured by thermistor and the one set by this trimmer as small as possible.
Indicators	
TEC indicator	Blue LED that has two states: • turned on when measured temperature is higher than set temperature, • turned off when measured temperature is lower than set temperature. Flashing means that those two states, described above, are changing quickly. Hence, it means also that measured temperature is very close to the set one.
Laser diode indicator	Green LED that lights when LPLDD-5A-24V-PID is ready to drive laser diode.
Warning indicator	Red LED that blinks when: • temperature measured by thermistor is higher than 50°C, • thermistor is disconnected
Jumpers	
Offset jumper	When connected, offset (bias) current of a laser diode is on.
Test jumper	It gives the possibility of switching on the driver without external analog signal. When connected, 5V is supplied from circuit to ANG input and laser diode is driven with maximum current (set on current trimmer). It shouldn't be used when ANG input is already connected.
Current monitor	
Current monitor (+)	Voltage measured on this pad and multiplied by 10 is equal to the laser diode's current.
Current monitor (-)	GND of the current monitor.

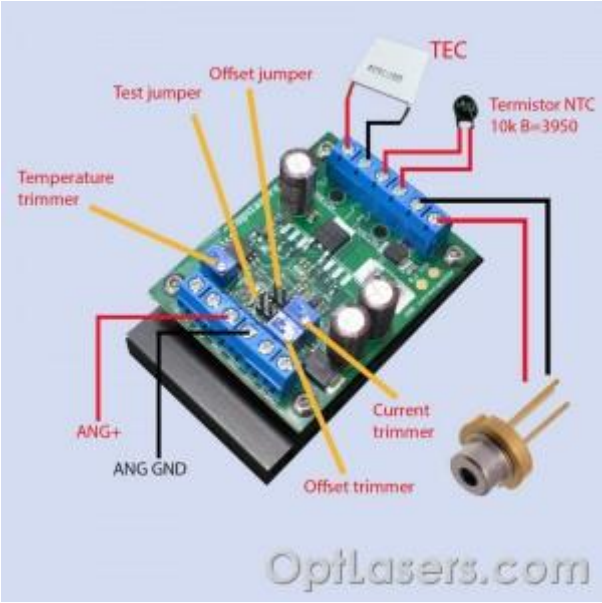

How to power supply the LPLDD 5A PID

Thanks to the dual power line of the driver it is possible to the power supply the driver in a various way. In order to power, the logic part of a driver TEC line must be always connected to proper voltage 7 - 24V. Laser diode part cannot work alone.

- **Laser diode driver with TEC and two PSU.**

  If the driver is working with TEC, the double power supply can be used. The one for laser diode should be 3,3-24V, meanwhile the second for TEC should be 7-24V. Analog modulation should be 0-5V.

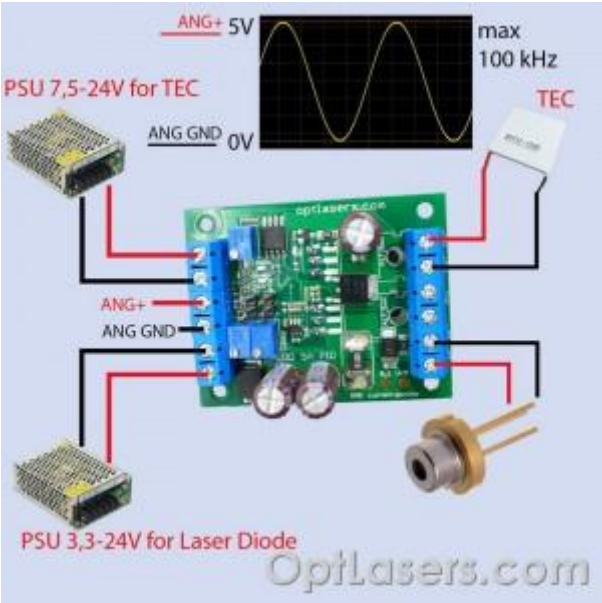

- **Laser diode driver with TEC and one PSU.**

If 7-24V PSU is used, it can power supply both, laser diode as well as TEC. Analog modulation should be 0-5V.

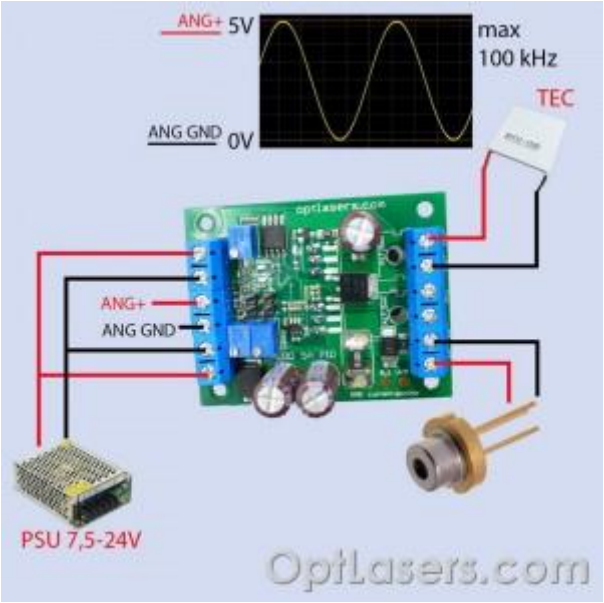

Connecting TEC to the driver

If one connects the TEC accordingly to the picture below, the side with the label will be cold during driver's work. If one connects the cables in the reverse order, the side without the label will be cold.

Adjusting the maximum current

The driver is fitted with a current monitor. Safe test of the current can be made without using a laser diode. Instead of using the laser diode, use a test load resistor (0,5-1Ω 5W) with silicon diode.

The maximum current, i.e. the output current corresponding to the maximum input signal (5.0 volts, 100% duty cycle) can be preset with the "Current trimmer" shown in the picture below.

Set up the maximum current as follows:

- make sure that the driver's power transistors are properly mounted on a heatsink,
- make sure that either the laser diode or an equivalent circuit is connected to the laser terminals,
- turn the "Current trimmer" fully counterclockwise,
- turn the power supply on,
- feed the ANG input with a 5.0V constant voltage or place the "Test jumper" to get the maximum controlling voltage,
- while checking the current, use the current monitor; voltage measured on the current monitor and multiplied by 10 is equal to the laser diode's current (e.g. 200mV on the current monitor means 2A),
- turn the "Current trimmer" clockwise until the desired maximum current has been reached,
- turn the input signal off and remove the "Test jumper" (if it was connected).

We recommend to check/set the current using test load resistor because it is much safer and will not harm the laser diode.

It is also possible to check/set the current with the use of a laser diode. In such a situation, the measurement is the same as before.

Adjusting the offset current

Adding an offset allows for “biasing” the laser diode with some current, e.g. in purpose to put the diode into state, when it is just before the laser action. Then, even a small input signal would trigger the laser action. Moreover, the driver would respond a bit faster to the input signal.

The offset current, i.e. the current flowing at the driver’s output at no input voltage, can be turned on with the “Offset jumper” and preset with the “Offset trimmer”.

The following curves show examples of the “output current - input voltage” characteristic without and with an offset.

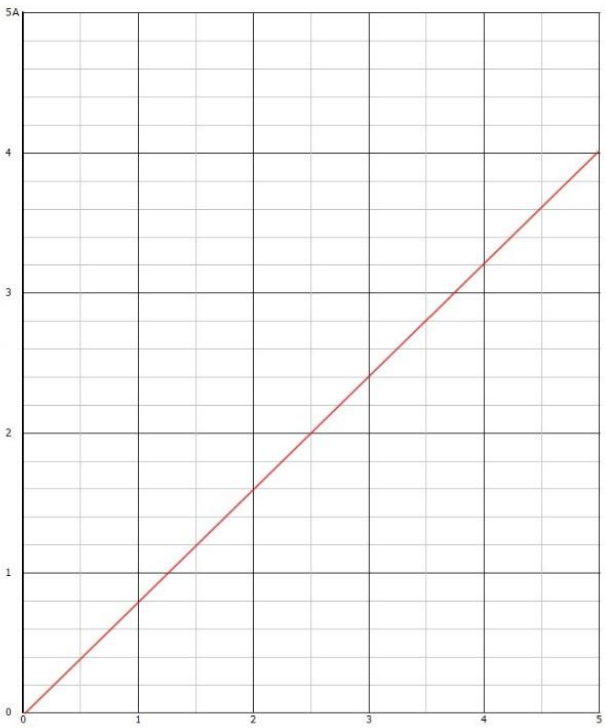

Figure 1. Characteristic with no offset current ("Offset jumper" removed). Maximum output current 4A.

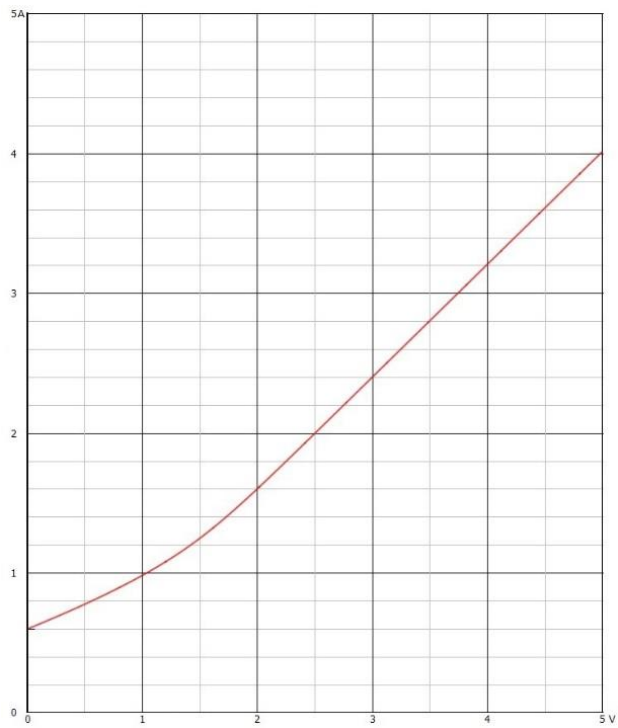

Figure 2. Characteristic with an offset current 0.6A ("Offset jumper" placed). Maximum output current 4A.

Set up the offset current as follows:

- turn the "Offset trimmer" fully counterclockwise,
- set up the maximum current as described in **Adjusting the maximum current;** it is very important step, because it is not possible to set higher bias current than maximum current (e.g. not possible to set any bias current, if "Current trimmer" is turned down to 0),
- make sure that the input signal is turned off and the "Test jumper" is removed,
- place "Offset jumper",
- turn the "Offset trimmer" clockwise until the laser action starts; then turn the trimmer slowly counterclockwise just until the laser action stops (or just set the bias current that you need); during this procedure it is recommended to check the laser current using the current monitor.

Later on, the "Offset jumper" may be removed and placed again during work depending on whether the offset is needed or not.

Recommendations and requirements

The minimum diode input voltage should be higher or equal to 3,3V, in other situations it is given by the formula:

$V_{in} = 0{,}4 * I + V_d + 0{,}6V$

V_{in} - input voltage
V_d - diode working voltage
I - desired maximum current

Modulation input can be used as TTL input with its logic levels of 0V and 5V or as an analog input. Analog modulation means that by using 2,5 V on ANG input you get 50% of the current flowing through the laser diode, analogically by using 4 V you get 80% of the current, etc.

You should be very careful not to cause a short circuit between the + (VCC) of the power supply and - (GND) of the analog input, as a thin GND analog path can be irreparably damaged.

The MOSFET/MOSFETs must be isolated from the heatsink/plate with silicon pad as well as the plastic sleeve. A short circuit between MOSFET and heatsink/plate can damage the driver and can be dangerous for the Laser Diode.

We recommend the use of power cables with the cross-section of at least 0.5 mm2.

Protection

The circuit responsible for powering a laser diode is protected against reversed polarity. The high current Schottky diode of an extremely low forward voltage secures the laser diode against connecting reversed voltage with the aim of protecting frequently the most expensive part of the entire device - a laser diode. In turn, the low forward voltage does not cause excessive heat loss during normal operation.

The analog input is protected by a 5V1 Zener diode on occasion there appears the voltage higher than 5V. Despite everything, this input should not be used with higher voltages.

A microcontroller ensures the proper operation of the entire system.

At the start, the microcontroller is checking the connection with a thermistor. If there is no thermistor used the WARNING LED is blinking but the driver is still working. If the connection with the thermistor is lost during normal work, the microcontroller turns off the laser diode supply circuit and does not allow for its further load, it also switches off the DIODE LED and switch on WARNING LED. The TEC line is also switched off. The same situation happens when the thermistor reaches the temperature above 50 degrees Celsius

The driver is fitted with a two-second soft-start designed to protect the laser diode against switch-on effects.

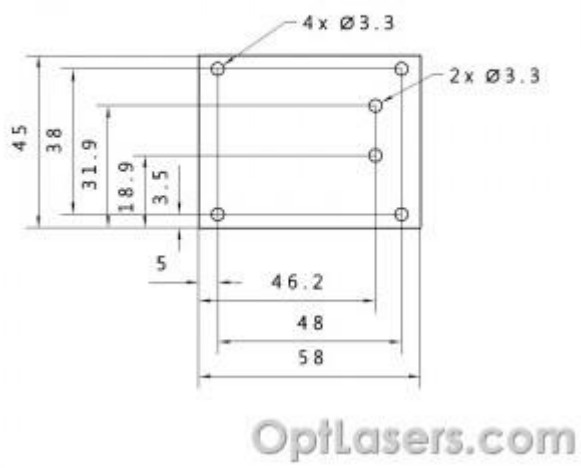

Store - product page

- LPLDD 5A PID
- LPLDD 5A PID-H